TFT MODULE SPECIFICATION

RVT43ALBFWC00 V3

4.3" EVE 3 LCD TFT DATASHEET
Rev. 1.0
2026-11-18

Riverdi Sp. z o.o.

Nowy Swiat 36
80-299 Gdansk, Poland
VAT ID: PL5842767153
Registration number (KRS): 0000923967

+48 587 703 116

Office hours: 9:00 to 17:30 CET (Mon-Fri)

contact@riverdi.com

riverdi.com

ITEM	CONTENTS	UNIT
LCD Type	TFT/Transmissive/Normally white	/
Size	4.3	Inch
Viewing Direction	12:00 (without image inversion)	O' Clock
Gray Scale Inversion Direction	6:00	O' Clock
Outside Dimensions (W x H x D)	106.30 x 83.98 x 8.82	mm
Active Area (W x H)	95.04 x 53.86	mm
Pixel Pitch (W x H)	0.198 x 0.198	mm
Resolution	480 x 272 (RGB)	/
Surface luminance	500	cd/m²
Interface Type	SPI/QSPI	/
Module Memory Size	1 MB (BT815) + 64 Mb (external flash)	/
Color Depth	16.7 M	/
Pixel Arrangement	RGB Vertical Stripe	/
Driver IC of Board	BT815	/
With/Without Touch	With Capacitive Touch Panel	/
TP Driver	FT5446U	/
LCD Input Voltage	3.3	V
Weight	TBD	g

Note 1. RoHS compliant

Note 2. LCM weight tolerance: ± 5%.

1. REVISION RECORD

REV NO.	REV DATE	CONTENTS	REMARKS
1.0	2026-11-18	Initial Release, PCN: RVD002-107	

2. CONTENTS

1. REVISION RECORD 3
2. CONTENTS 4
3. MODULE CLASSIFICATION INFORMATION 5
4. ASSEMBLY GUIDE 6
   4.1 Mounting frame 6
5. MODULE DRAWING 7
6. ABSOLUTE MAXIMUM RATINGS 8
7. ELECTRICAL CHARACTERISTICS 8
8. BACKLIGHT ELECTRICAL CHARACTERISTICS 8
9. ELECTRO-OPTICAL CHARACTERISTICS 9
10. INTERFACES DESCRIPTION 12
    10.1 CN2 connector - RiBUS description 12
11. BT815 CONTROLLER SPECIFICATIONS 13
    11.1 Serial host interface 13
    11.2 Block diagram 13
    11.3 Host interface SPI mode 0 14
    11.4 Backlight driver block diagram 14
12. TFT TIMING CHARACTERISTICS 15
    12.1 Parallel 24-bit RGB input timing table 15
    12.2 SYNC Mode Timing Diagram 16
    12.3 SYNC-DE Mode Timing Diagram 17
    12.4 DE Mode Timing Diagram 18
13. INSPECTION 18
14. RELIABILITY TEST 19
15. LEGAL INFORMATION 20
16. CONTACT 21

3. MODULE CLASSIFICATION INFORMATION

RV	T	43	A	L	B	F	W	C	00	V3
1.	2.	3.	4.	5.	6.	7.	8.	9.	10.	11.

NO.	PARAMETER	SYMBOL
1.	BRAND	RV – Riverdi
2.	PRODUCT TYPE	T – TFT Standard
3.	DISPLAY SIZE	43 – 4.3”
4.	MODEL SERIAL NO.	A – (A-Z)
5.	RESOLUTION	L – 480 x 272 px
6.	INTERFACE	B – TFT + Controller BT815
7.	FRAME	F – With Mounting Metal Frame
8.	BACKLIGHT TYPE	W – LED White
9.	TOUCH PANEL	C – Capacitive Touch Panel
10.	VERSION	00 – version
11.	MODULE REVISION	V3

© 2026 Riverdi

4. ASSEMBLY GUIDE

4.1 Mounting frame

For dimensions 3.5”, 4.3”, 5.0” and 7.0” the product with mounting frame version is available. Thanks to the four catches attached to the side, frame provides strong assembly to the surface by mounting element (like the screw, see Figure 1). The frames are specially designed to fit Riverdi products perfectly. The diameter of the mounting hole is 3.5mm.

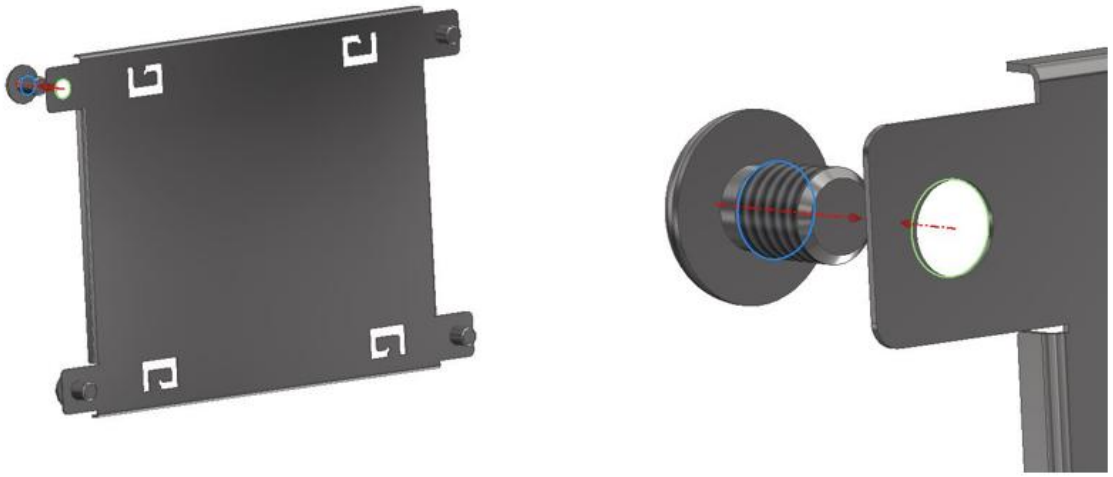

Figure 1. Mounting Frame

Revision:	Changes:	Date:
1.0	Initial Case, PCN: RVD002-107	2026.11.18

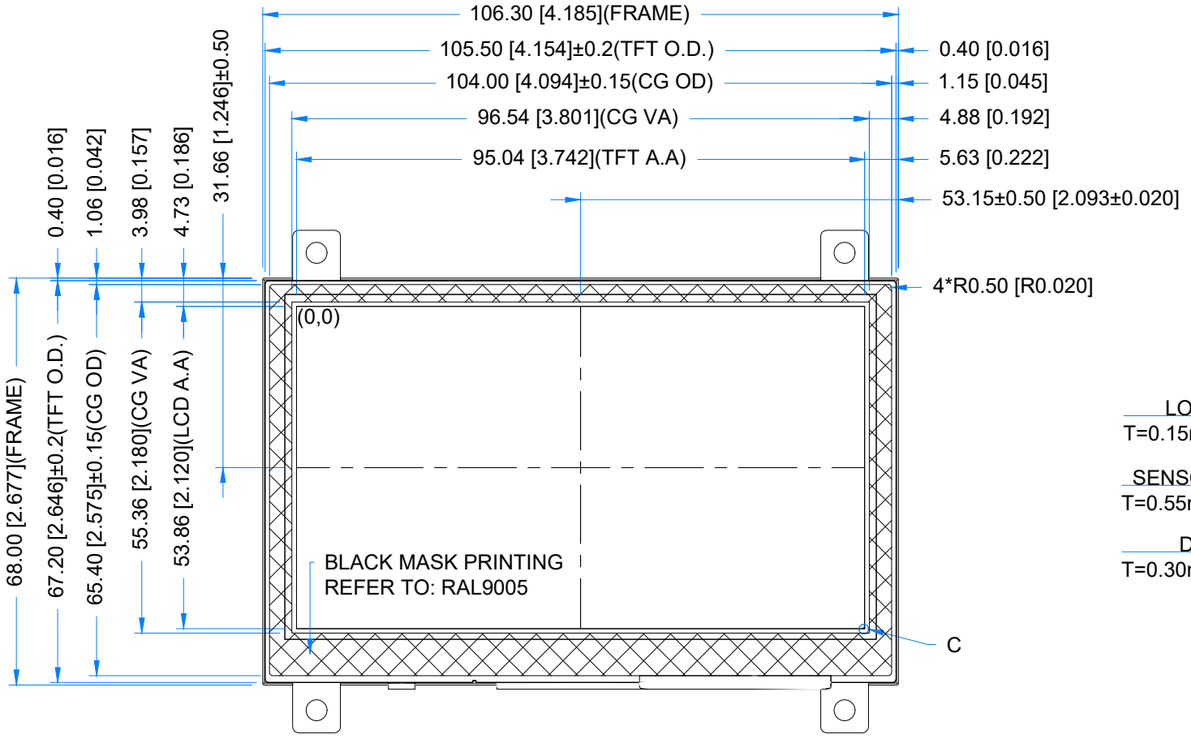

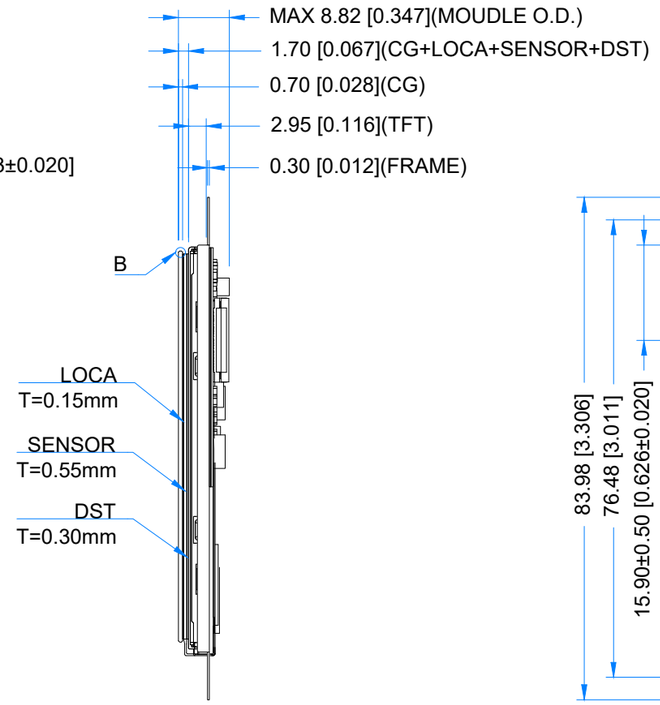

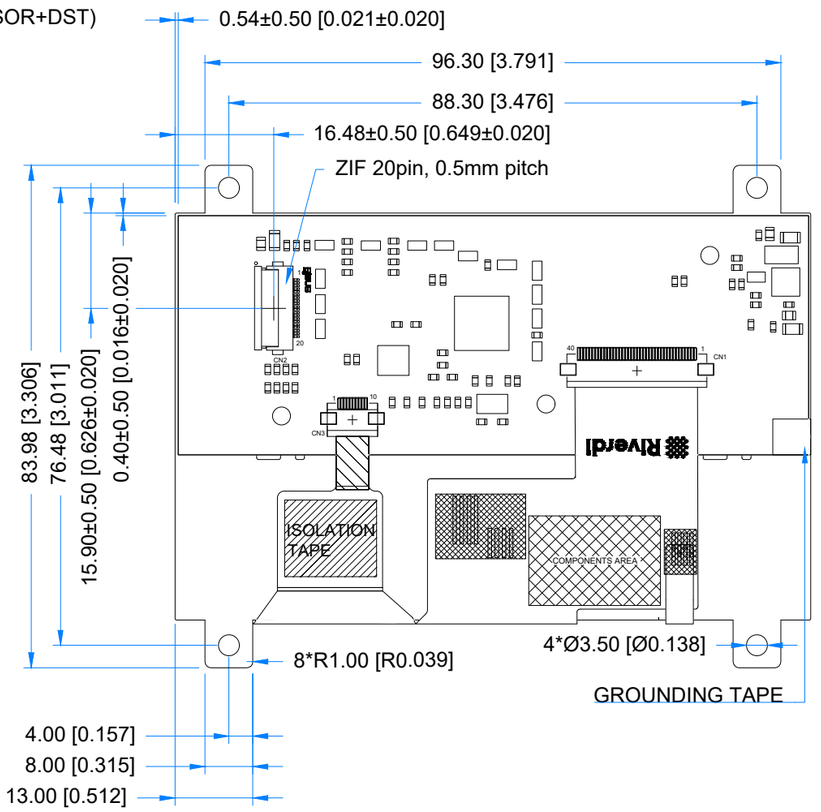

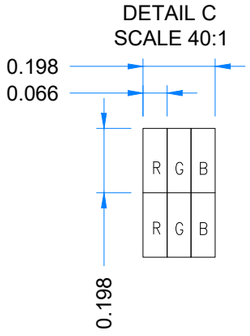

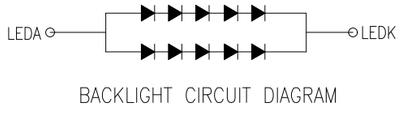

BACKLIGHT CIRCUIT DIAGRAM

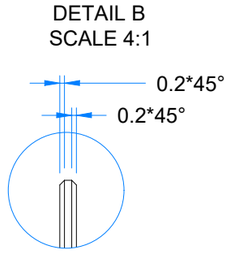

TFT NOTES:
1. DISPLAY TYPE: TRANSMISSIVE, NORMALLY WHITE
2. RESOLUTION: 480x272
3. VIEWING ANGLE: 12 O'CLOCK
4. INTERFACE: SPI/I2C
5. DRIVER IC ON THE BOARD: BT815
6. SUPPLY VOLTAGE FOR MODULE: 3.3V
7. SUPPLY VOLTAGE FOR BACKLIGHT: 5.0V, BUILT-IN LED DRIVER

TP NOTES:
1. TP STRUCTURE: G+G
2. CG THICKNESS: 0.70mm
3. DRIVER IC: FT5446U
4. SURFACE HARDNESS: 7H
5. INTERFACE: SPI VIA RIBUS AND BT815

GENERAL NOTES:
1. SURFACE LUMINANCE: 500cd/m^2
2. OPERATING TEMPERATURE: -20°C ~ 70°C
3. STORAGE TEMPERATURE: -30°C ~ 80°C
4. WITHOUT INDIVIDUAL TOLERANCE: ±0.3mm
5. RoHS COMPLIANT

PN: RVT43ALBFWC00 V3				Riverdi
SN:				
DRAWN:	M.Stabinski	2026.11.18	1:1.03	
CHECKED:	M.Wierzbowski	2026.11.18	[mm]	
APPR:	M.Wierzbowski	2026.11.18	ISO A3	P. 1 of 1

6. ABSOLUTE MAXIMUM RATINGS

PARAMETER	SYMBOL	MIN	MAX	UNIT
Power Supply Voltage	VDD	0	4.0	V
Digital I/O signals (SPI/QSPI/GPIO) Voltage	VIN	0	4.0	V
Supply voltage for Backlight	BLVDD	0	7.0	V
Operating Temperature	T_{OP}	-20	70	°C
Storage Temperature	T_{ST}	-30	80	°C

7. ELECTRICAL CHARACTERISTICS

PARAMETER	SYMBOL	MIN	TYP	MAX	UNIT	NOTE
Supply Voltage for Module	VDD	3.0	3.3	3.6	V	
Input Voltage for LED Inverter	BLVDD	2.8	5.0	5.5	V	
LED Backlight Current	$IDD_{backlight}$	-	260	325	mA	BLVDD=3.3V
LED Backlight Current	$IDD_{backlight}$	-	150	187	mA	BLVDD=5V
Input Voltage “H” Level	V_{IH}	0.7VDD	-	VDD	V	
Input Voltage “L” Level	V_{IL}	0	-	0.2VDD	V	

8. BACKLIGHT ELECTRICAL CHARACTERISTICS

PARAMETER	SYMBOL	MIN	TYP	MAX	UNIT
Backlight Lifetime	-	30,000	50,000	-	hours

Note: Operating lifetime means brightness goes down to 50% initial brightness; The lifetime of LED will be reduced if LED is driven by high current, high ambient temperature and humidity conditions. Typical operating lifetime is an estimated data.

9. ELECTRO-OPTICAL CHARACTERISTICS

ITEM	SYMBOL	CONDITION	MIN	TYP	MAX	UNIT	RMK	NOTE
Response Time	Tr+Tf	θ=0° ø=0° Ta=25 °C	-	25	50	ms	FIG 2.	4, 7
Contrast Ratio	Cr		400	500	-	---	FIG 3.	1, 7
Luminance Uniformity	δ WHITE		80	-	-	%		3
Surface Luminance	Lv		-	500	-	cd/m2		2, 7
Viewing Angle Range	θ	ø = 90°	40	50	-	deg	FIG 4.	6
		ø = 270°	60	70	-	deg		
		ø = 0°	60	70	-	deg		
		ø = 180°	60	70	-	deg		
CIE (x, y) Chromaticity	Rx	θ=0° ø=0° Ta=25 °C	0.546	0.596	0.646	-	FIG 3.	5,7
	Ry		0.312	0.362	0.412	-		
	Gx		0.277	0.327	0.377	-		
	Gy		0.524	0.574	0.624	-		
	Bx		0.097	0.147	0.197	-		
	By		0.016	0.066	0.116	-		
	Wx		0.236	0.286	0.336	-		
	Wy		0.256	0.306	0.356	-		
NTSC ratio	-	-		55.2	-	%		

Note 1. Contrast Ratio (CR) is defined mathematically as below, for more information see Figure 3.

$$\text{Contrast Ratio} = \frac{\text{Average Surface Luminance with all white pixels (P1, P2, P3, P4, P5)}}{\text{Average Surface Luminance with all black pixels (P1, P2, P3, P4, P5)}}$$

Note 2. Surface luminance is the LCD surface from the surface with all pixels displaying white. For more information see Figure 3.

Lv = Average Surface Luminance with all white pixels (P1, P2, P3, P4, P5)

Note 3. The uniformity in surface luminance δ WHITE is determined by measuring luminance at each test position 1 through 5, and then dividing the minimum luminance of 5 points luminance by maximum luminance of 5 points luminance. For more information see Figure 3.

$$\delta \text{ WHITE } = \frac{\text{Minimum Surface Luminance with all white pixels (P1, P2, P3, P4, P5)}}{\text{Maximum Surface Luminance with all white pixels (P1, P2, P3, P4, P5)}}$$

Note 4. Response time is the time required for the display to transition from white to black (Rise Time, Tr) and from black to white (Decay Time, Tf). For additional information see Figure 2. The test equipment is BM-7A.

Note 5. CIE (x, y) chromaticity, the x, y value is determined by measuring luminance at each test position 1 through 5, and then make average value.

Note 6. For TFT module, viewing angle is the angle at which the contrast ratio is greater 10. The angles are determined for the horizontal or x axis and the vertical or y axis with respect to the z axis which is normal to LCD surface. For more information see Figure 4.

Note 7. Viewing angle is measured at the center point of the LCD by CONOSCOPE (ergo-80). For response time testing, the testing data is based on BM-7A. Instruments for Contrast Ratio, Surface Luminance, Luminance Uniformity, Chromaticity the test data is based on SR-3A.

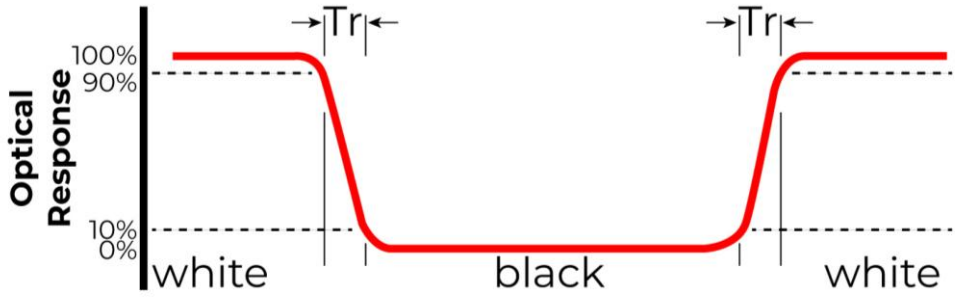

Figure 2. The definition of response time

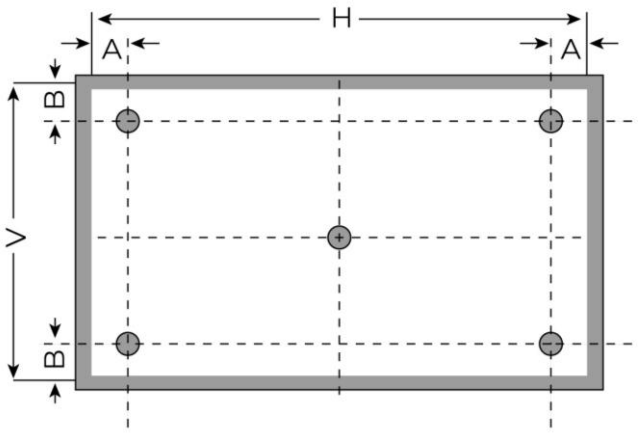

A: 5mm

B: 5mm

H, V: Active Area

Light spot size ∅=5mm, 500mm distance from the LCD surface to detector lens.

Measurement instrument is SR-3A

Figure 3. Measuring method for Contrast ratio, surface luminance, Luminance uniformity, CIE (x, y) chromaticity

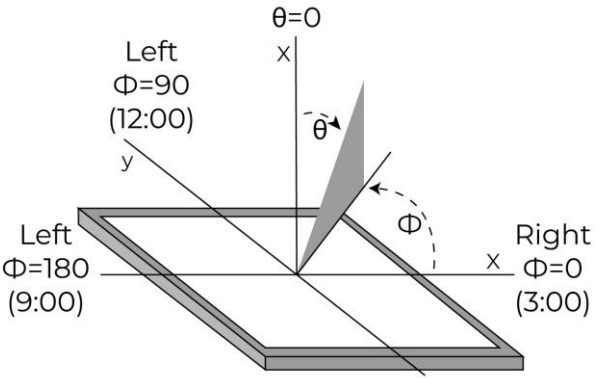

Figure 4. The definition of viewing angle

10. INTERFACES DESCRIPTION

10.1 CN2 connector - RiBUS description

PIN	SYMBOL	DESCRIPTION
1	VDD	Power Supply
2	GND	Ground
3	SPI_SCLK	SPI SCK Signal, Internally 47k Pull UP
4	MISO/ IO1	SPI MISO Signal / SPI Quad mode: SPI data line 1
5	MOSI/ IO0	SPI MOSI Signal / SPI Quad mode: SPI data line 0
6	CS	SPI Chip Select Signal , Internally 47k Pull UP
7	INT	Interrupt Signal, Active Low, Internally 47k Pull UP
8	PD	Power Down Signal, Active Low, Internally 47k Pull UP
9	NC	Not Connected
10	AUDIO_OUT	Audio Out Signal
11	GPIO0/IO2	SPI Single mode: General purpose IO0/SPI Quad mode: SPI data line 2
12	GPIO1/IO3	SPI Single mode: General purpose IO1/SPI Quad mode: SPI data line 3
13	GPIO2	General purpose IO2
14	GPIO3	General purpose IO3 or analog input for ADC
15	NC	Not Connected
16	NC	Not Connected
17	BLVDD	Backlight Power Supply, Can Be Connected to VDD
18	BLVDD	Backlight Power Supply, Can Be Connected to VDD
19	BLGND	Backlight Ground, Internally connected to GND
20	BLGND	Backlight Ground, Internally connected to GND

11. BT815 CONTROLLER SPECIFICATIONS

BT815 or EVE3 (Embedded Video Engine 3) simplifies the system architecture for advanced human machine interfaces (HMIs) by providing functionality for display, audio, and touch as well as an object oriented architecture approach that extends from display creation to the rendering of the graphics.

11.1 Serial host interface

Figure 5. SPI interface connection

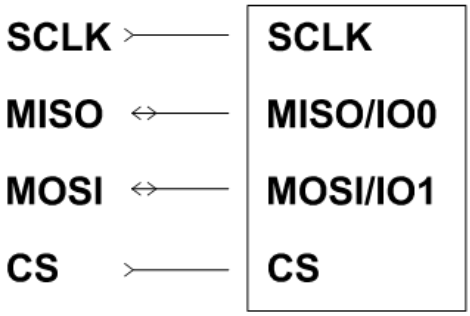

Figure 6. QSPI interface connection

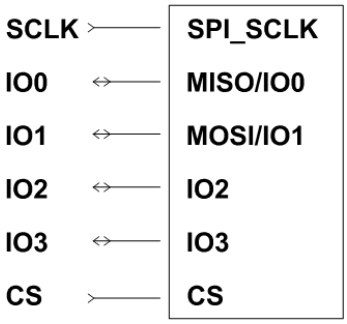

SPI Interface – the SPI slave interface operates up to 30MHz.

Only SPI mode 0 is supported. The SPI interface is selected by default (MODE pin is internally pulled low by 47k resistor).

11.2 Block diagram

Figure 7. BT8x Block diagram

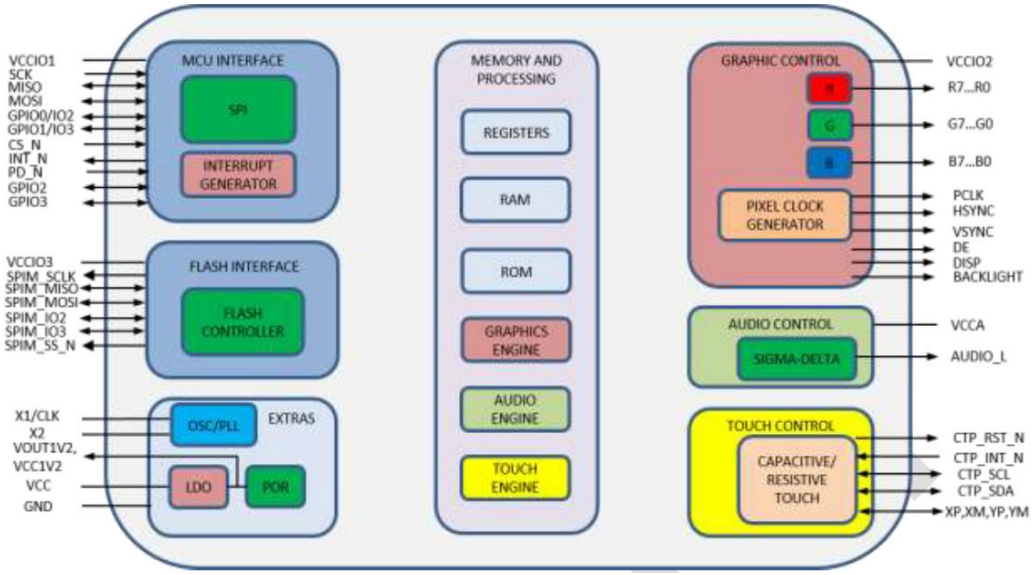

11.3 Host interface SPI mode 0

Figure 8. SPI timing diagram

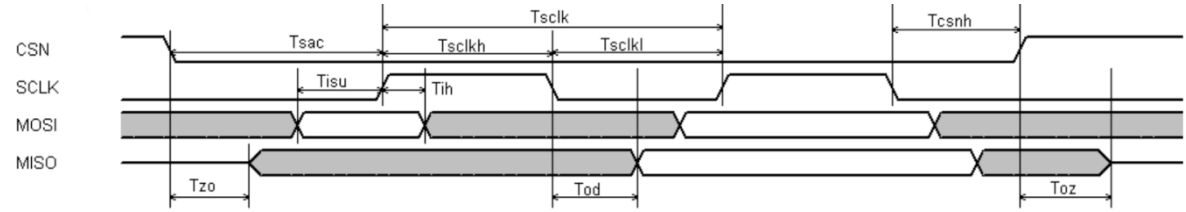

For more information about BT815 controller please go to official BT81X website.

https://www.ftdichip.com/Products/ICs/BT81X.html

11.4 Backlight driver block diagram

Backlight enable signal is internally connected to BT815 Backlight control pin. This pin is controlled by two BT815's registers. One of them specifies the PWM output frequency, second one specifies the duty cycle. Refer to BT8x datasheet for more information.

Figure 9. Backlight driver block diagram

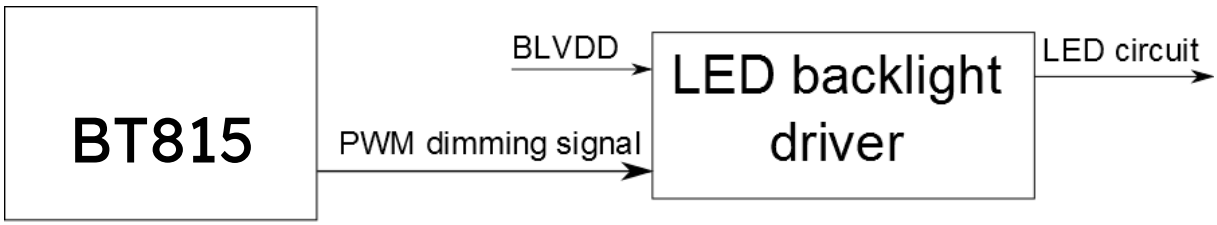

12. TFT TIMING CHARACTERISTICS

12.1 Parallel 24-bit RGB input timing table

PARAMETER	SYMBOL	MIN	TYP	MAX	UNIT	REMARK
DCLK Frequency	Fclk	8	9	12	MHz	
DCLK Period	Tclk	83	111	125	ns	
HSYNC Period Time	Th	485	531	598	DCLK	
HSYNC Display Period	Thdisp		480		DCLK	
HSYNC Back Porch	Thbp	3	43	43	DCLK	By H_blanking setting
HSYNC Front Porch	Thfp	2	8	75	DCLK	
HSYNC Pulse Width	Thw	2	4	75	DCLK	
VSYNC Period Time	Tv	276	292	321	HSYNC	
VSYNC Display Period	Tvdisp		272		HSYNC	
VSYNC Back Porch	Tvbp	2	12	12	HSYNC	By V_blanking setting
VSYNC Front Porch	Tvfp	2	8	37	HSYNC	
VSYNC Pulse Width	Tvw	2	4	37	HSYNC	

12.2 SYNC Mode Timing Diagram

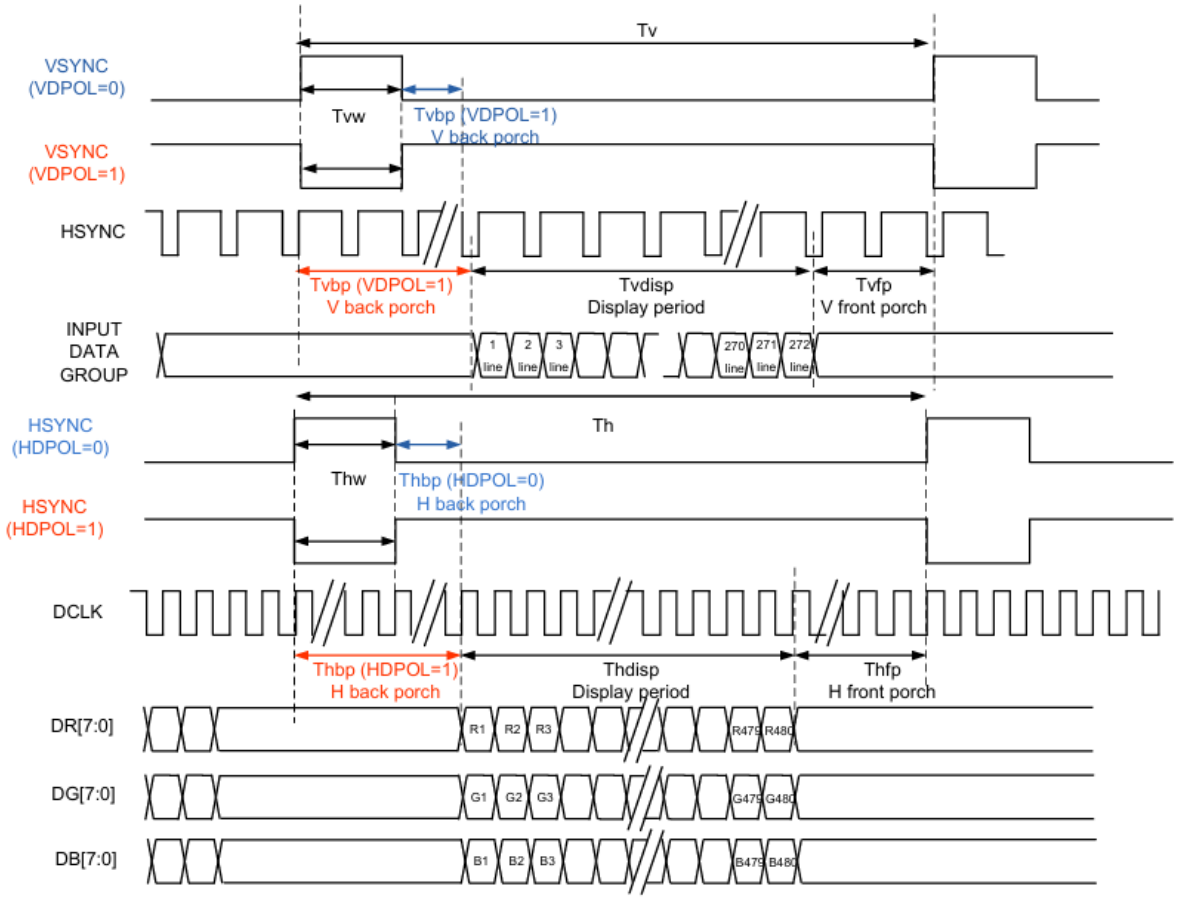

12.3 SYNC-DE Mode Timing Diagram

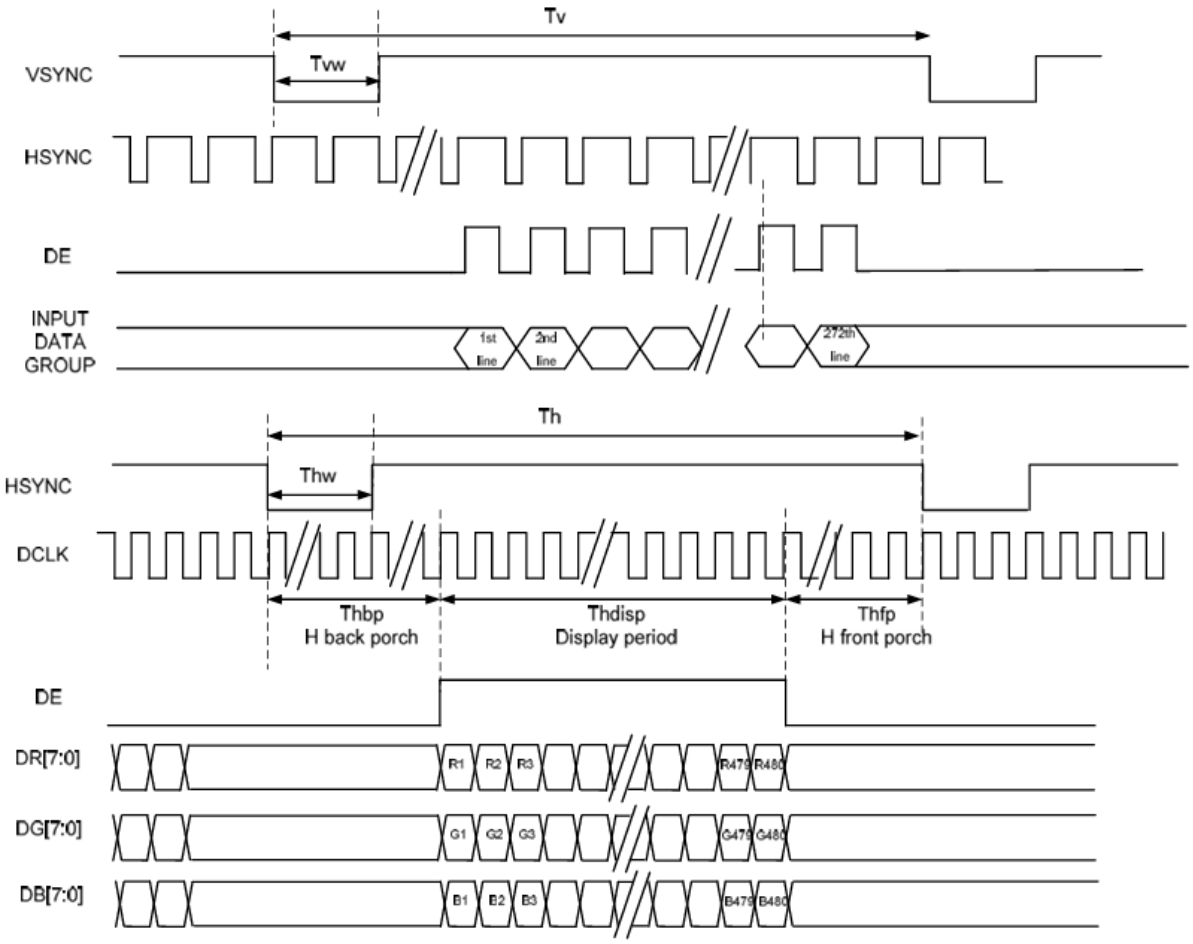

12.4 DE Mode Timing Diagram

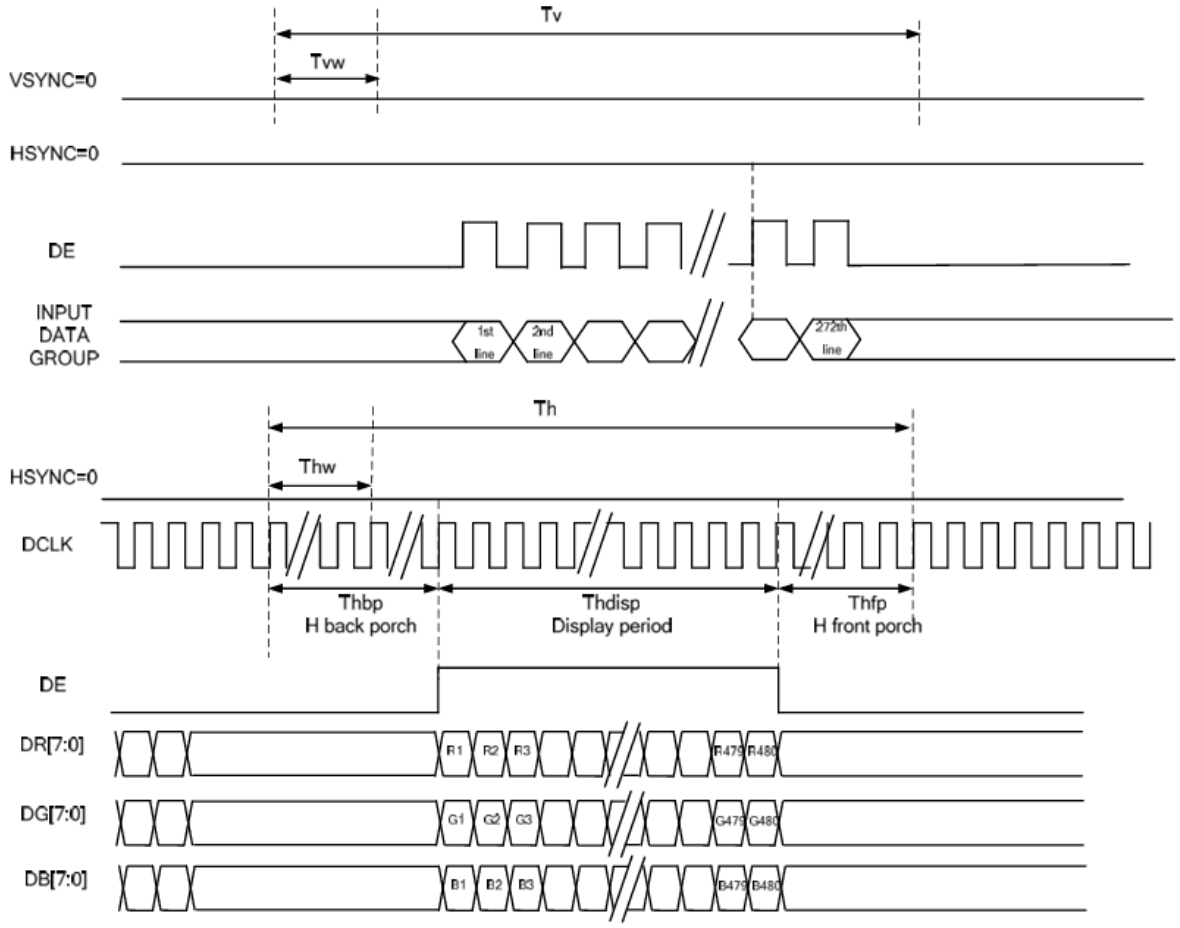

13. INSPECTION

Standard acceptance/rejection criteria for TFT module according to document available here.

14. RELIABILITY TEST

NO.	TEST ITEM	TEST CONDITION	NOTE
1	High Temperature Storage	80℃ ± 2℃ / 240Hrs.	IEC60068-2-2 GB2423.2
2	Low Temperature Storage	-30℃ ± 2℃ / 240Hrs.	IEC60068-2-1 GB2423.1
3	High Temperature Operating	70℃ ± 2℃ / 240Hrs.	IEC60068-2-2 GB2423.2
4	Low Temperature Operating	-20℃ ± 2℃ / 240Hrs.	IEC60068-2-1 GB2423.1
5	High Temperature and High Humidity Operation Test	60 ± 5℃, 90%RH 240Hrs.	IEC60068-2-3 GB/T2423.3
6	Thermal Shock Test (Non-operating)	-20±2℃(30Min.)~25±2℃(5Min.)~60±2℃(30Min.) 10Cycles	IEC60068-2-14 GB2423.22
7	Vibration Test (Non-operating)	Frequency: 10~55Hz Amplitude: 1.5mm Sweep Time: 11Mins Test Period: 6 Cycles For Each Direction of X, Y, Z (Packing Condition)	IEC60068-2-6 GB2423.10
8	Electro Static Discharge Test	R: 330Ω, C:150pF, 5points/panel Air: ±8KV, 10times; Contact: ±4KV, 10times; (Environment: 15℃~35℃, 30%~60%, 86Kpa~106Kpa)	IEC61000-4-2 GB/T17626.2

Notes

A. LCM each function is OK.
B. LCM appearance inspection without abnormalities (Including scratch, damage, corrosion and serious deformation)
C. LCM brightness above the Min. value of Spec.
D. Luminance uniformity above the Min. value of Spec.
E. Color chromaticity within tolerance range.

15. LEGAL INFORMATION

CE marking is usually obligatory only for a complete end product. Riverdi display modules are semi-finished goods which are used as inputs to become part of the finished products.

Therefore, Riverdi display modules are not CE marked.

This is not a standalone product. It was designed as an electronic component. It needs integration with a whole system to be fully functional.

Riverdi grants the guarantee for the proper operation of the goods for a period of 12 months from the date of possession of the goods. If in a consequence of this guaranteed execution the customer has received the defects-free item as replacement for the defective item, the effectiveness period of this guarantee shall start anew from the moment the customer receives the defects-free item.

Information about device is the property of Riverdi and may be the subject of patents pending or granted. It is not allowed to copy or disclosed this document without prior written permission.

Riverdi endeavors to ensure that all contained information in this document is correct but does not accept liability for any error or omission. Riverdi products are in developing process and published information may be not up to date. Riverdi reserves the right to update and makes changes to Specifications or written material without prior notice at any time. It is important to check the current position with Riverdi.

Images and graphics used in this document are only for illustrative the purpose. All images and graphics are possible to be displayed on the range products of Riverdi, however the quality may vary. Riverdi is no liable to the buyer or to any third party for any indirect, incidental, special, consequential, punitive, or exemplary damages (including without limitation lost profits, lost savings, or loss of business opportunity) relating to any product, service provided or to be provided by Riverdi, or the use or inability to use the same, even if Riverdi has been advised of the possibility of such damages.

Riverdi products are not fault tolerant nor designed, manufactured or intended for use or resale as on line control equipment in hazardous environments requiring fail–safe performance, such as in the operation of nuclear facilities, aircraft navigation or communication systems, air traffic control, direct life support machines or weapons systems in which the failure of the product could lead directly to death, personal injury or severe physical or environmental damage (‘High-Risk Activities’). Riverdi and its suppliers specifically disclaim any expressed or implied warranty of fitness for High-Risk Activities. Using Riverdi products and devices in 'High-Risk Activities' and in any other application is entirely at the buyer’s risk, and the buyer agrees to defend, indemnify and hold harmless Riverdi from all damages, claims or expenses resulting from such use. No licenses are conveyed, implicitly or otherwise, under any Riverdi intellectual property rights.

16. CONTACT

Your Success is Our Priority

Stuck on a technical challenge? Need expert guidance?
Our dedicated support team is just a message away.

Contact us at
contact@riverdi.com

We're here to ensure your project's success, every step of the way!